Mi-T-M® CORPORATION

8650 Enterprise Drive, Peosta IA 52068
563-556-7484 / Fax 563-556-1235

PARTS LIST FOR

HSP-2003-0MGH/GV

(AFTER SERIAL #26203)

For parts Call 888-279-9274

ENGINE OIL GRADE:	**SAE 10W-30**
HONDA:	**ABOVE 40°F=SAE30**
VANGUARD:	**BELOW 40°F=10W-30**
ENGINE OIL CAPACITY:	
HONDA:	**20 OZ.**
VANGUARD:	**24 OZ.**

PUMP OIL GRADE:	**Mi-T-M PUMP OIL #AW4085-0016**
PUMP OIL CAPACITY:	**6.5 OZ.**
FUEL NOZZLE:	**1.25 60°B DELAVAN**
BTU INPUT:	**205,000/HOUR**
PRESSURE NOZZLE SIZE:	**4.0**

©Copyright 2001, Mi-T-M Corporation

This Parts Listing has been compiled for your benefit. You can be assured your hot water pressure washer was constructed and designed with quality and performance in mind using over 25 years experience in the pressure washer business. Each component has been rigorously tested to insure the highest level of acceptance.

The contents of this Parts Listing are based on the latest product information available at the time of publication. Mi-T-M reserves the right to make changes in price, color, materials, equipment, specifications or models at any time without notice.

WARNING

THIS IS A PROFESSIONAL HIGH PRESSURE, HOT WATER PRESSURE WASHER. CAUTION SHOULD BE OBSERVED WHEN USING OR REPAIRING THIS UNIT! READ AND FOLLOW THE SAFETY WARNINGS LISTED BELOW BEFORE ATTEMPTING ANY REPAIRS ON THIS PRESSURE WASHER!

SAFETY WARNINGS

1. NEVER alter or modify the equipment. Be sure any accessory items and system components being used will withstand the pressure developed. Use only genuine Mi-T-M parts for repair of your pressure washer. Failure to do so can cause hazardous operating conditions and will VOID warranty.

2. NEVER make adjustments on machinery while the unit is connected to the engine without first removing the ignition cable from the spark plug. Turning over the machinery by hand during adjustment or cleaning might start the engine and machinery with it, causing serious injury to the operator.

3. Know how to stop and bleed pressures quickly. Be thoroughly familiar with controls.

4. Before servicing the unit, turn unit off, relieve the water pressure and allow the unit to cool down. Do not make repairs while the unit is running. Service in a clean, dry, flat area. Block the wheels to prevent the unit from moving. Be especially careful to properly dispose of any flammable

Table of Contents

SPECIFICATIONS 3
FLOW CHART 4
EMF SYSTEM 4
GENERAL THEORY OF OPERATION 5
DECAL PLACEMENT 6
FRAME ASSEMBLY 8
ENGINE/PUMP ASSEMBLY 10
HIGH PRESSURE PUMP (3-0105) 12
PRESSURE SWITCH (22-0243) 14
COIL DRAIN PLUG (850-0218) 16
HEAT EXCHANGER/EMF SYSTEM 18
BOILER ASSEMBLY (850-0224) 20
GUN/WAND (850-0179) & ADJUSTABLE PRESSURE DUAL LANCE (850-0185) 22
FUEL TANK (850-0214) 24
FUEL PUMP (3-0129) 26
FUEL SOLENOID (44-0098) 27
EMF SYSTEM (850-0239) 28
WIRING SCHEMATIC 30
WIRING DIAGRAM 31

©Copyright 2001, Mi-T-M Corporation

SPECIFICATIONS

HSP-2003-0MGH/GV

MODEL NUMBER	HSP-2003-0MGH	HSP-2003-0MGV
Operating Pressure (PSI/Bar):	2000/ 137.90 (+/- 5%)	
Water Volume (GPM/lpm):	2.7/10.22 (+/- 5%)	
Outlet Water Temperature (F/C):	130 F/ 54 C (+/- 20 F) rise above inlet ambient (210 F/ 99 C maximum)	
Engine:	Honda	Briggs & Stratton Vanguard
Horsepower	5.5	
Engine Type	Four Stroke, Overhead Valve, Single Cylinder	
Oil Type	SAE10 W30	Above 40 F=SAE30/ Below 40 F=SAE 10W-30
Oil Capacity (oz./liter)	20/.6	24/.7
Low Oil Protection	Oil Alert™	Oil Guard™
Fuel Type	Unleaded Gasoline 86 Octane Minimum	
Fuel Capacity (gal./liter)	.95/ 3.6	1.05/3.97
Starting	Recoil Rope	
Maximum No Load RPM	3600 (+/- 100)	
High Pressure Pump:	Direct Driven, Oil Bath, Triplex Piston	
Oil Type	Mi-T-M Pump Oil #AW-4085-0016	
Oil Capacity (oz./liters)	6.5/.19	
Plungers	Ceramic	
Manifold	Forged Brass	
Valves	Stainless Steal	
Unloader	Adjustable	
Inlet Water Strainer	Removable Clear Bowl for inspection and cleaning of Stainless Steel Screen	
Heat Dump Valve	Relieves heated water during unloader bypass stage	
Pressure Gauge	Glycerine filled indicating pressure gauge	
Detergent Injector:	Adjustable Low Pressure downstream from pump	
Burner Fuel System:		
Fuel Type	No.1 or No.2 Fuel Oil, Diesel or Kerosene	
Fuel Capacity (gal./liters)	4.0/15.14	
Fuel Filter/ Water Separator	Spin on (10 micron) filter/ E-Z water drain	
Fuel Pump	Two Line, Single Stage	
Fuel Pressure (PSI/ BAR)	140/ 9.65	
Fuel Nozzle	1.25 60 B Delavan	
Fuel Consumption (GPH/ LPH)	1.48 GPH Continous Burning	
Electro Magnetic Firing (EMF) System:	Belt Driven (Patent Pending)	
Ignition	Transistorized Magneto	
Control Voltage	12 Volt DC	
Blower	Forced Air	
Heat Exchanger:	Vertical, Top fired, Dual Spiral Coil	
BTU Input	205,000	
Efficiency	80-83% with #2 Fuel Oil/ Diesel	
Smoke Density	0-3 per ASTM D2156	
Controls:		
On/ Off Switch	Industrial grade rotary switch	
Pressure Switch	Shuts off burner fuel supply upon trigger release	
High Limit Switch	Shuts off burner fuel supply when outlet water temp. exceeds 210 F/ 99 C	
Fuel Solenoid:	12 Volt	
Safety Relief:	Relieves excess system pressure	
Unit Net Weight (Lbs/kg):	266/121	271/123
Unit Shipping Weight (Lbs/kg):	383/174	388/176
Unit Net Dimension (In/cm):	37.5L x 29.5W x 37.5H/95L x 75W x 95H	
Unit Shipping Dimension (In/cm):	46.5L x 31.5W x 48.5H/118L x80W x123H	

©Copyright 2001, Mi-T-M Corporation

FLOW CHART

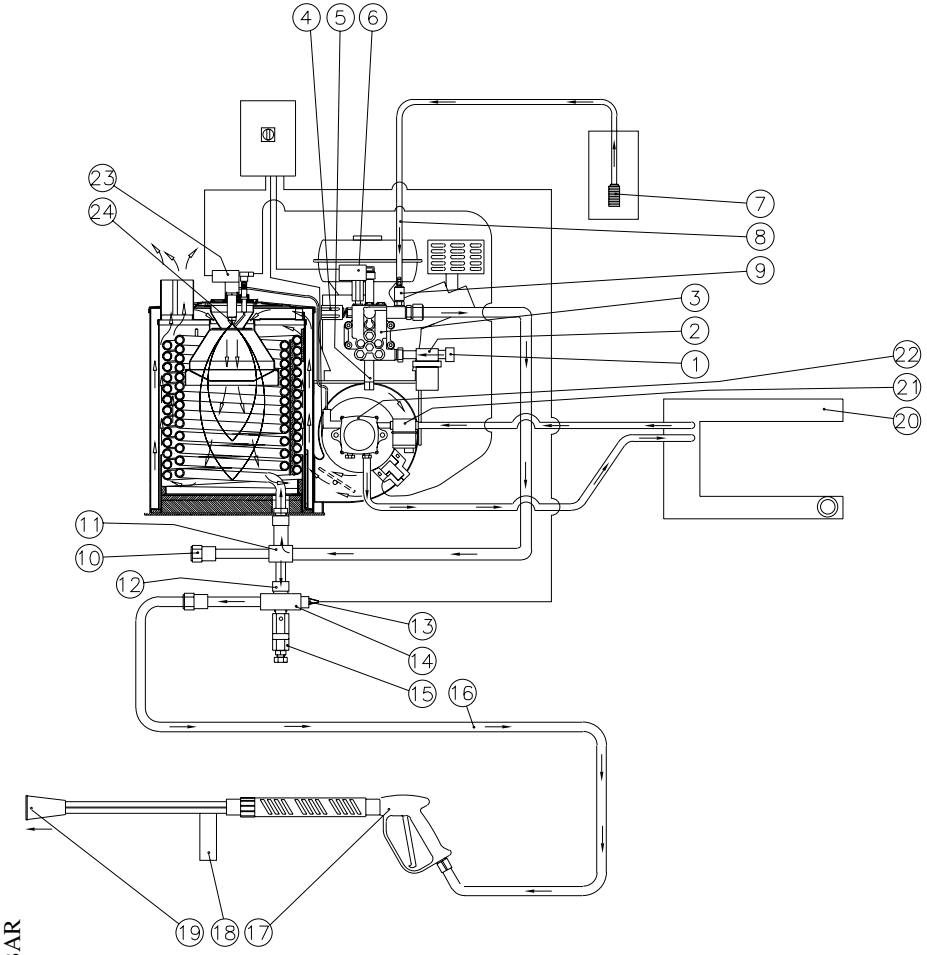

OMHSP002-110298-BAR

EMF SYSTEM

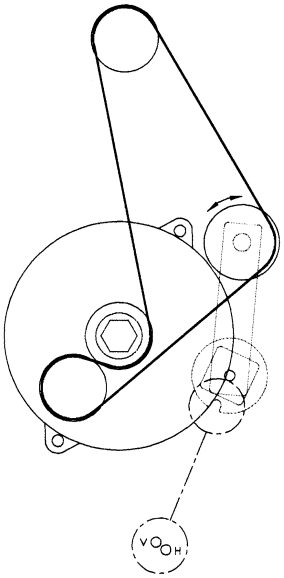

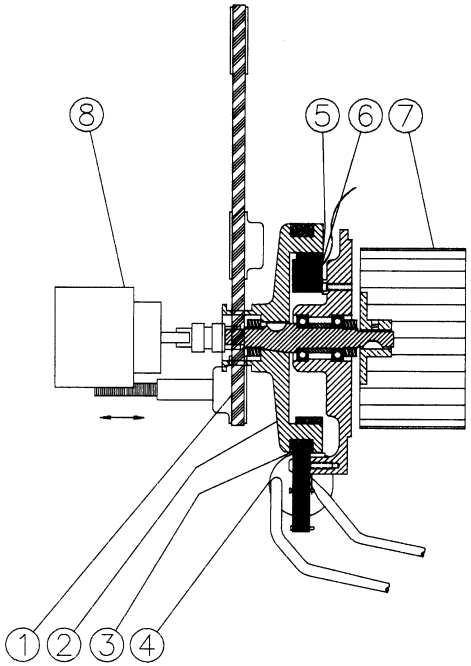

OMHSP008-012494-BAR

©Copyright 2001, Mi-T-M Corporation

GENERAL THEORY OF OPERATION

WATER FLOW: Connect a pressurized water source to the INLET GARDEN HOSE CONNECTION (1) and turn on the water supply. The water will flow through a WATER STRAINER (2) which has a clear inspection bowl.

The water then travels into the TRIPLEX HIGH PRESSURE PUMP (3) which has an UNLOADER (4) that bypasses the water when the trigger gun is closed. To protect the pump from heated water during this bypass stage, a HEAT DUMP VALVE (5) will open at 140°F/ 60°C allowing the heated water to escape. The Heat Dump Valve automatically resets when the water cools. The PRESSURE SWITCH (6) controls the fuel supply to the burner.

When using detergents, the solution passes through the DETERGENT STRAINER (7) located on the DETERGENT HOSE (8). The detergent solution then travels into the ADJUSTABLE LOW PRESSURE DETERGENT INJECTOR (9).

From there, the water may be allowed to flow out of the DRAIN PLUG (10) or through the HEAT EXCHANGER INLET (11) where it is heated when the burner is on. As the water exits the HEAT EXCHANGER OUTLET (12), it enters a safety system which protects the operator from danger. The safety system contains a HIGH TEMPERATURE LIMIT SWITCH (13) which senses the water temperature and shuts off the fuel supply to the burner if it gets too hot. If the unloader fails to by pass the water or the burner remains on when the trigger gun is closed, the SAFETY RELIEF (15) will relieve and allow water to exit safely.

The heated water then flows through the HIGH PRESSURE HOSE (16) and to the TRIGGER GUN ASSEMBLY (17) which allows the operator to control the water spray. When the trigger gun is open, the water flows through the ADJUSTABLE PRESSURE DUAL LANCE (18) and exits the NOZZLE (19).

FUEL FLOW: The Fuel Pump draws fuel from the FUEL TANK (20) through a replaceable FUEL FILTER/WATER SEPARATOR (21) and into the FUEL PUMP (22). Fuel exits the fuel pump, into a FUEL SOLENOID VALVE (23) which controls fuel flow to the FUEL NOZZLE (24) where it ignites and burns in the heat exchanger.

EMF SYSTEM: The patent pending Electro Magnetic Firing (EMF) System is an integrated system which gives all the requirements for combustion.

The BELT (1) from the power source turns the HUB (2) which has two EXTERIOR MAGNETS (3) attached. As these magnets spin past the IGNITION MODULE (4), a magnetic flux is created from which the ignition module produces a high voltage. This voltage arcs across the electrodes giving the spark that is needed for ignition.

This hub has an INTERNALLY MOUNTED MAGNET (5) which spins past a STATOR (6) that produces the voltage that controls the fuel supply to the heat exchanger. In addition to this, the hub also spins the BLOWER FAN (7) that forces the air into and through the heat exchanger.

The FUEL PUMP (8) is also connected the hub by means of a flexible coupler.

©Copyright 2001, Mi-T-M Corporation

DECAL PLACEMENT

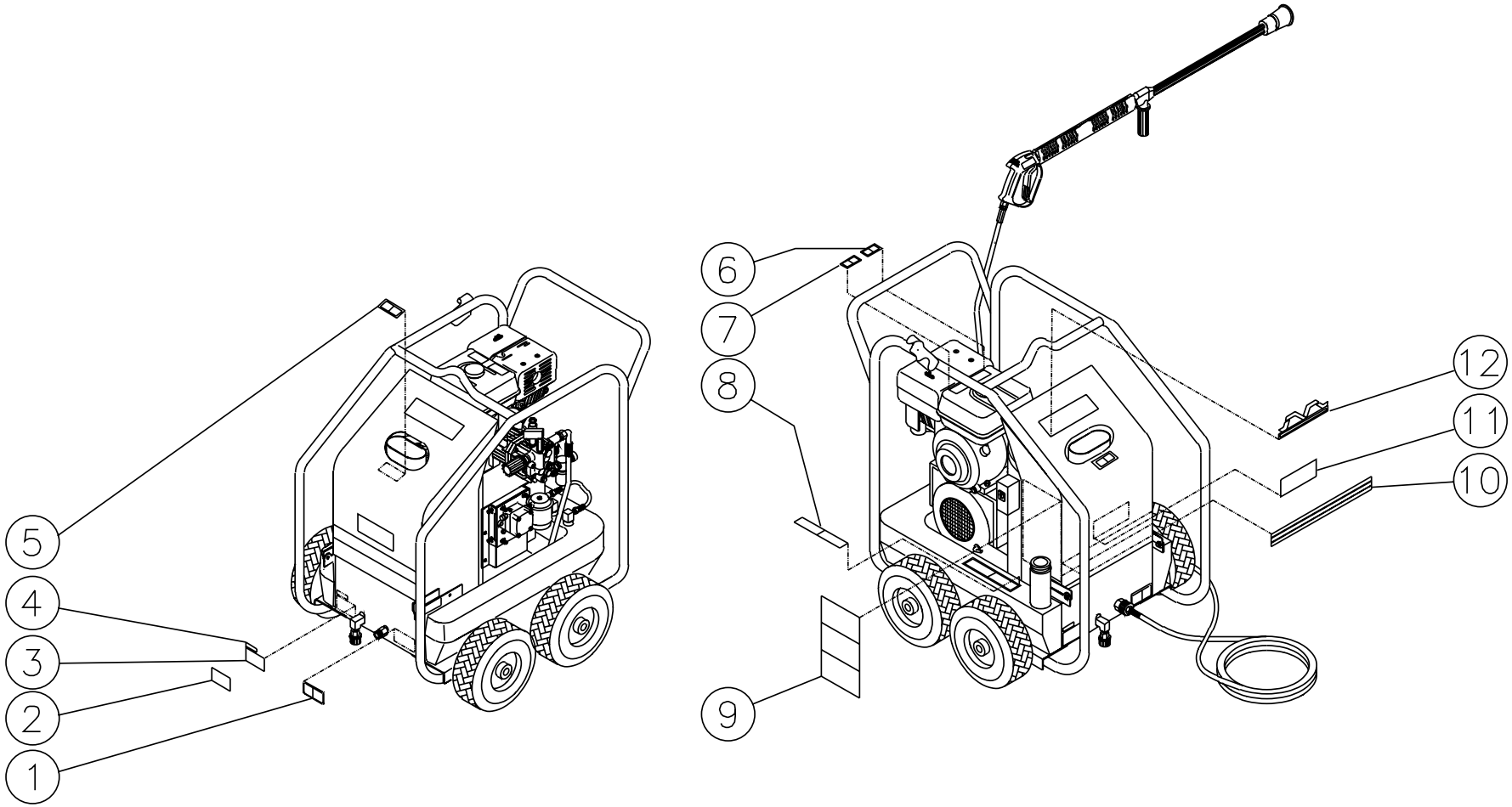

HSP-2003-0MGH/GV-030899-BAR

©Copyright 2001, Mi-T-M Corporation

DECAL PLACEMENT			
REF. #	**DESCRIPTION**	**PART #**	**QTY.**
1	Decal- Warning: Don't Modify Plumbing (E/S)	34-0852	1
2	Decal- Clear Laminate	N/A	1
3	Decal- Data Plate	N/A	1
4	Serial Number	N/A	1
5	Decal- Warning: Hot Coil Exhaust (E/S)	34-0808	1
6	Decal- Allow to Cool (E/S)	34-0599	1
7	Decal- Hot Surface (E/S)	34-0598	1
8	Decal- Risk of Fire (E/S)	34-0806	1
9	Decal- Warning/ Caution/ Operation (E/S)	34-0847	1
10	Decal- Stripe	34-0560	1
11	Decal-White Die Cut	34-0551	1
12	Plastic Mi-T-M Logo	62-0087	1

©Copyright 2001, Mi-T-M Corporation

FRAME ASSEMBLY

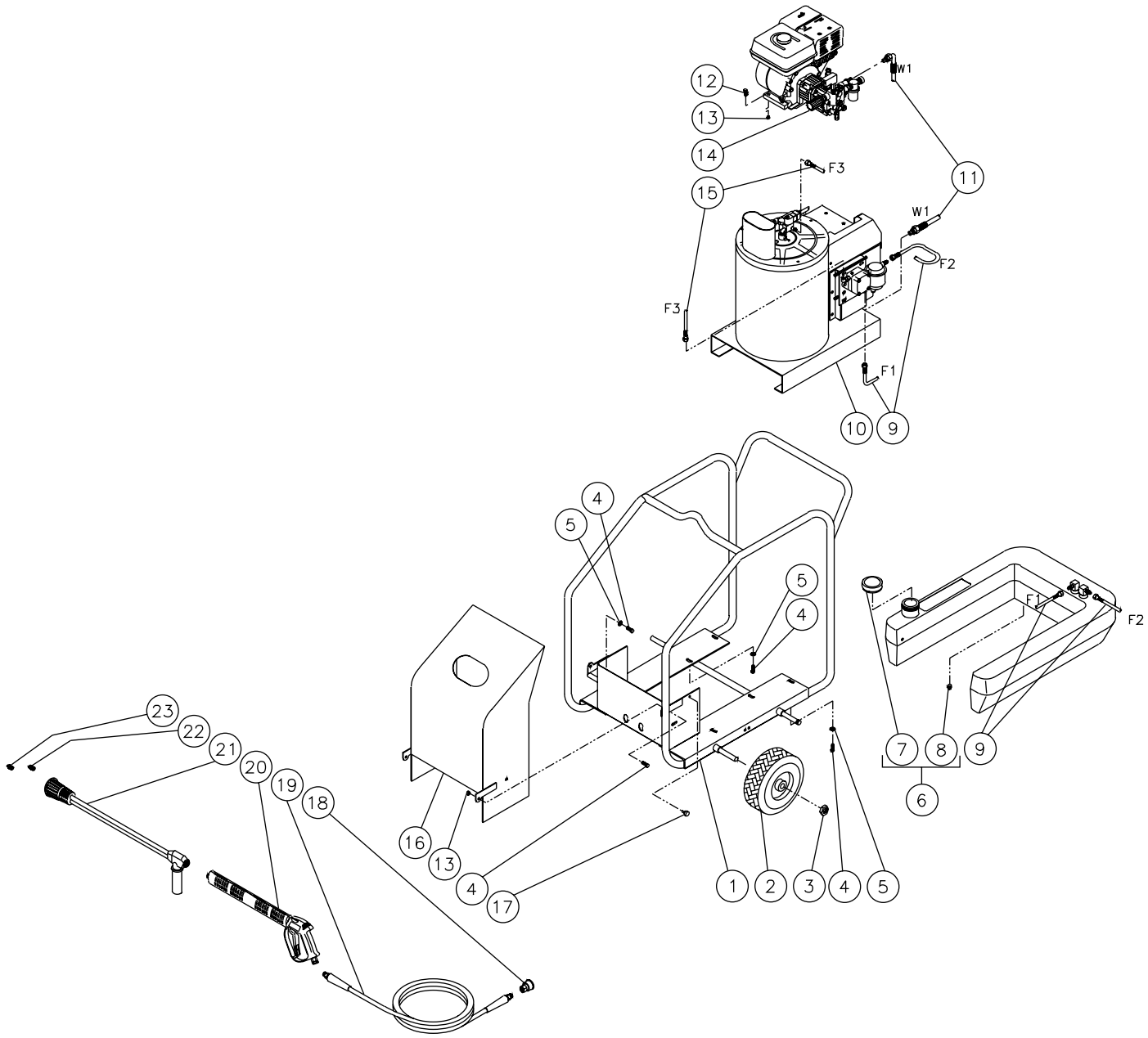

HSP108-031899-BAR

©Copyright 2001, Mi-T-M Corporation

For parts Call 888-279-9274

HSP108-031899-BAR

FRAME ASSEMBLY							
REF. #	**DESCRIPTION**	**PART #**	**QTY.**	**REF. #**	**DESCRIPTION**	**PART #**	**QTY.**
1	Frame Assembly	5-9002A01	1	13	Hex Nut	30-3023	6
2	Wheel	14-0017	4	14	Engine/ Pump Assembly (See Exploded Drawing)	N/A Sep.	1
3	Jam Nut	30-0117	4	15	Fuel Line	33-0217	1
4	Bolt	27-9524	12	16	Hood Assembly	850-0164	1
5	Flatwasher	28-0022	10	17	Screw Cover	62-0057	1
6	Fuel Tank Assembly (Inc. 7, 8)	850-0214	1	18	Screw Connect	17-0035	1
7	Fuel Cap	12-0033	1	19	Hose Assembly	15-0146	1
8	Plug	23-0296	1	20	Gun/ Lance Assembly	850-0179	1
9	Fuel Hose	15-0147	2	21	Dual Lance Assembly- 36"	850-0185	1
10	Heat Exchanger/ EMF System Assembly (See Exploded Drawing)	N/A Sep.	1	22	Nozzle- 1503.5	18-0254	1
11	High Pressure Hose Assembly	15-0144	1	23	Nozzle- 4060	18-0110	1
12	Bolt	27-9525	4				

©Copyright 2001, Mi-T-M Corporation

ENGINE/PUMP ASSEMBLY

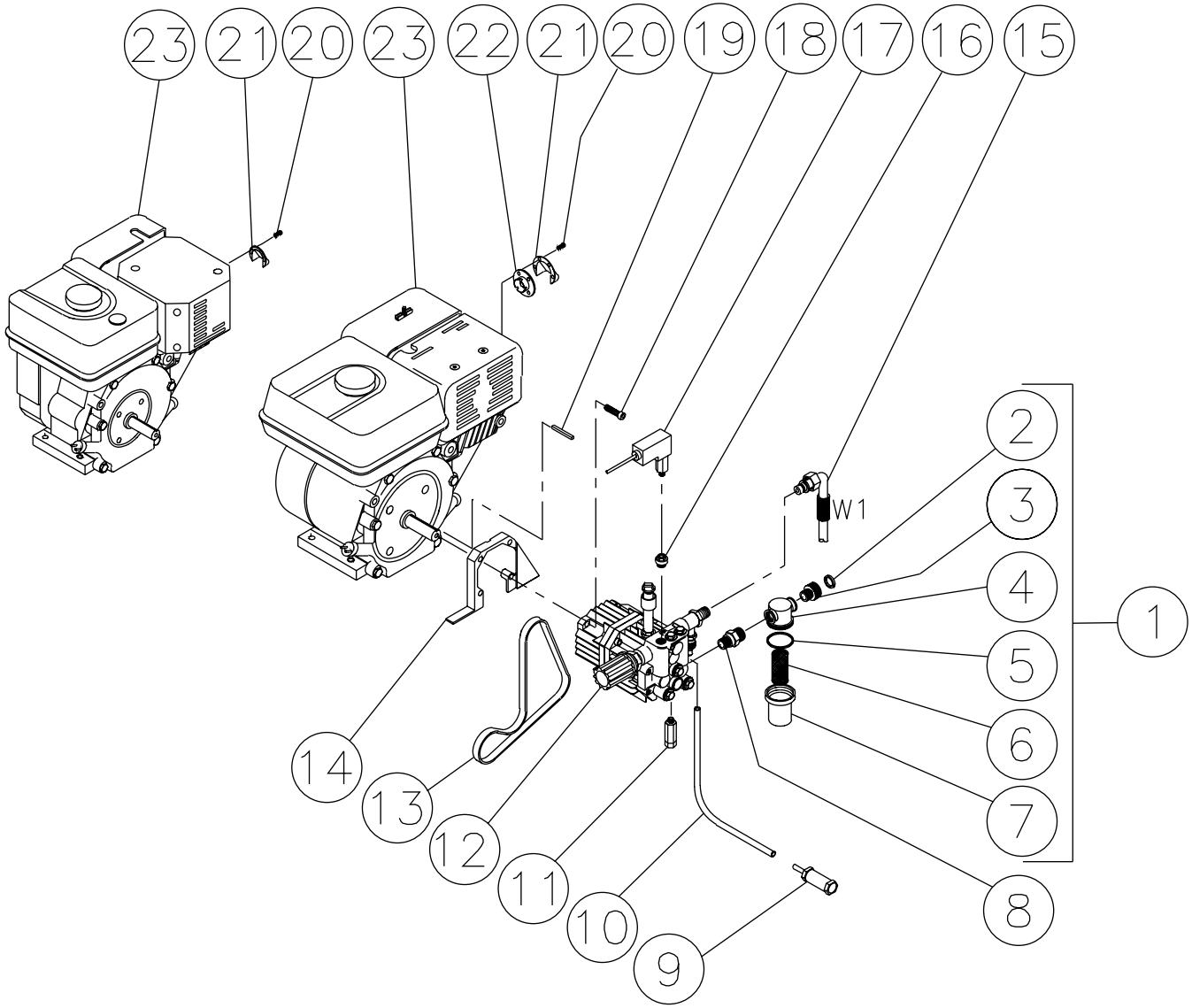

HPS109-031899-BAR

©Copyright 2001, Mi-T-M Corporation

For parts Call 888-279-9274

HSP109-031899-BAR

ENGINE/PUMP ASSEMBLY									
REF #	**DESCRIPTION**	**PART #**	**QTY 0MGH**	**QTY 0MGV**		**REF #**	**DESCRIPTION**	**PART #**	**QTY 0MGH**	**QTY 0MGV**
1	Strainer Complete (Includes 2-7)	19-0057	1	1		15	Pressure Hose	15-0144	1	1
2	Hose Gasket	26-0001	1	1		16	Valve Plug	39-0081	1	1
3	Hose Swivel	23-0095	1	1		17	Pressure Switch	22-0243	1	1
4	Strainer Cap	19-0058	1	1		18	Cap Screw	27-0849	4	4
5	Strainer Gasket	26-0160	1	1		19	Keystock	43-0073	1	1
6	Stainless Steel Screen	19-0059	1	1		20	Screw- Honda	27-3093	2	-
7	Strainer Bowl	19-0060	1	1		-	Screw- Vanguard	27-3094	-	2
8	Hex Adapter	23-0241	1	1		21	Muffler Deflector- Honda	45-0051	1	-
9	Detergent Strainer	19-0050	1	1		-	Muffler Deflector- Vanguard	45-0050	-	1
10	Detergent Hose *(Six Feet Required)	15-0021	1	1		22	Muffler Guide- Honda	45-0052	1	-
11	Thermo Valve	22-0208	1	1		23	Engine- 5.5 H.P. Honda	1-0013	1	-
12	Pump Axial Piston	3-0105	1	1		-	Engine- 6.0 H.P. Vanguard	1-0069	-	1
13	Belt	11-0037	1	1		*Must Order in One Foot Lengths				
14	Flange/Guard	38-0039	1	1						

©Copyright 2001, Mi-T-M Corporation

HIGH PRESSURE PUMP (3-0105)

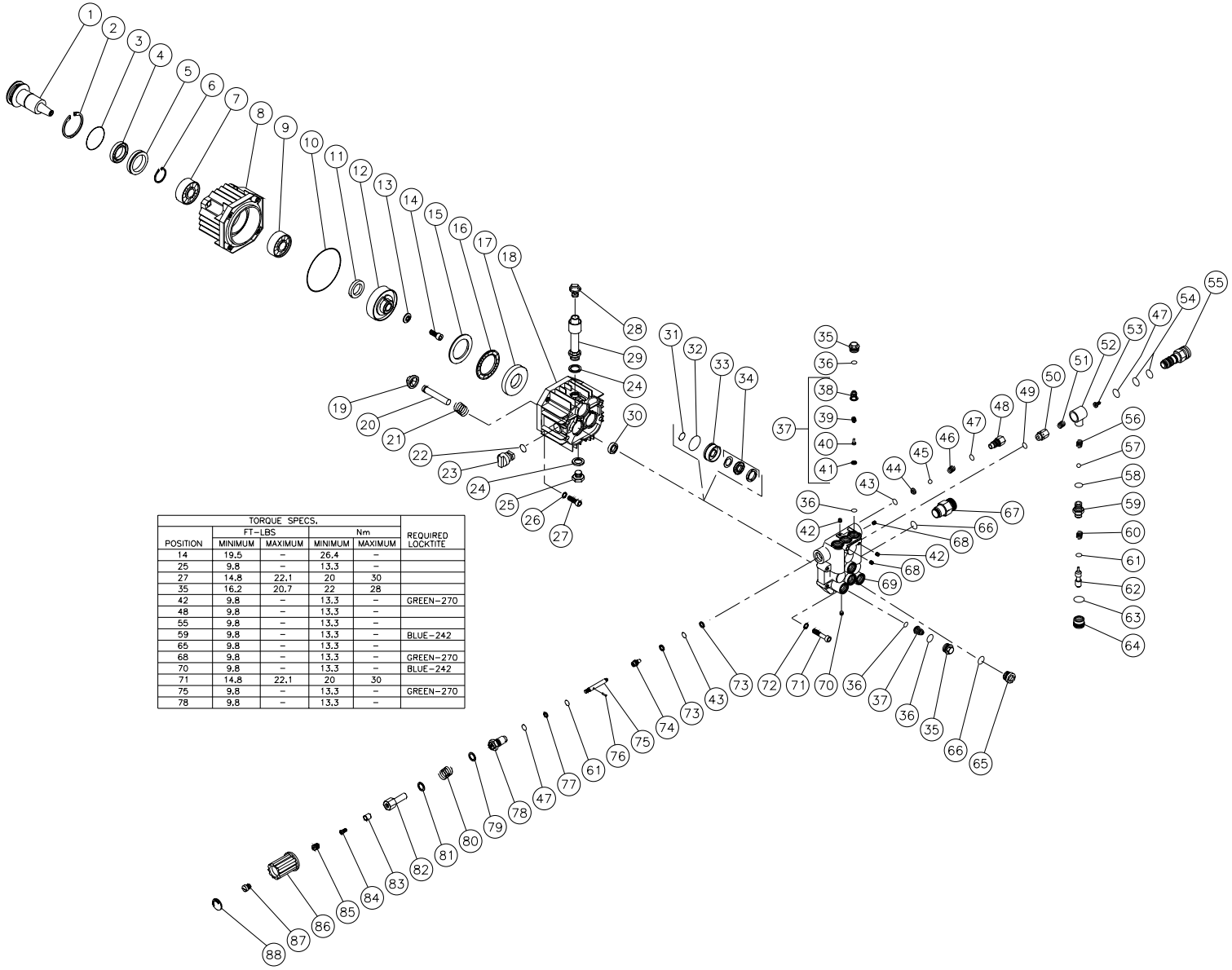

TORQUE SPECS.					
	FT-LBS		Nm		REQUIRED LOCKTITE
POSITION	MINIMUM	MAXIMUM	MINIMUM	MAXIMUM	
14	19.5	–	26.4	–	
25	9.8	–	13.3	–	
27	14.8	22.1	20	30	
35	16.2	20.7	22	28	
42	9.8	–	13.3	–	GREEN-270
48	9.8	–	13.3	–	
55	9.8	–	13.3	–	
59	9.8	–	13.3	–	BLUE-242
65	9.8	–	13.3	–	
68	9.8	–	13.3	–	GREEN-270
70	9.8	–	13.3	–	BLUE-242
71	14.8	22.1	20	30	
75	9.8	–	13.3	–	GREEN-270
78	9.8	–	13.3	–	

3-0105-022001-BAR

©Copyright 2001, Mi-T-M Corporation

3-0105-022001-BAR

HIGH PRESSURE PUMP (3-0105)

REF. #	DESCRIPTION	PART #	QTY.	REF. #	DESCRIPTION	PART #	QTY.	REF. #	DESCRIPTION	PART #	QTY.
1	Pump Shaft	N/A	1	34	V-Packing (See 70-0237)	N/A Sep.	3	67	Hex Adapter	23-0241	1
2	Circle Clip	46-0405	1	35	Valve Plug	46-0628	6	68	Screw	27-8822	2
3	O-ring	25-0272	1	36	O-ring	25-0335	12	69	Manifold	46-0629	1
4	Oil Seal	46-0425	1	37	Valve Complete (Inc. 38-41) (See 70-0237)	N/A Sep.	6	70	Screw	27-8198	1
5	Spacer	46-0407	1	38	Valve Cage (See 70-0237)	N/A Sep.	6	71	Bolt	27-8479	4
6	Circle Clip	46-0406	1	39	Valve Spring (See 70-0237)	N/A Sep.	6	72	Lockwasher	29-0055	4
7	Rear Bearing	48-0036	1	40	Valve Plate (See 70-0237)	N/A Sep.	6	73	Back-up Ring	25-0247	2
8	Flange	52-0028	1	41	Valve Seat (See 70-0237)	N/A Sep.	6	74	Piston By-Pass	46-0423	1
9	Front Bearing	48-0037	1	42	Screw	27-8821	2	75	Pressure Regulator (See 70-0120)	N/A Sep.	1
10	O-ring	25-0243	1	43	O-ring	25-0230	2	76	Roll Pin	46-0421	1
11	Washer	46-0468	1	44	Valve Seat	46-0409	1	77	Back-up Ring	25-0246	1
12	Wobble Plate	46-0616	1	45	Ball	46-0394	1	78	Plug (See 70-0120)	N/A Sep.	1
13	Washer	28-0133	1	46	Valve Spring	46-0411	1	79	Washer	46-0624	1
14	Bolt	27-8432	1	47	O-ring	25-0255	3	80	Pressure Regulation Spring	49-0109	1
15	Rear Bearing Disc	48-0047	1	48	Plug	46-0412	1	81	Washer	46-0648	1
16	Bearing	48-0048	1	49	O-ring	25-0334	1	82	Pressure Regulation Screw	46-0623	1
17	Front Bearing Disc	48-0049	1	50	No Return Valve	46-0626	1	83	Screw Support	27-8853	1
18	Pump Housing	46-0806	1	51	Spring	49-0110	1	84	Bolt	27-8810	1
19	Piston Spring Retainer	46-0362	3	52	Injector Body	46-0620	1	85	Internal Screw	27-8852	1
20	Ceramic Piston	46-0578	3	53	Injector Nozzle	46-0415	1	86	Pressure Regulation Knob	7-0091	1
21	Piston Spring	49-0081	3	54	O-ring	25-0263	2	87	Screw	27-8086	1
22	O-ring	25-0255	1	55	Pressure Outlet	46-0828	1	88	Cap	7-0088	1
23	Sight Glass	46-0735	1	56	Spring (See 852-0056)	N/A Sep.	1		Oil Drain Plug Kit (Inc. 24, 25)	70-0083	1
24	Gasket	26-0168	2	57	Ball (See 852-0056)	N/A Sep.	1		Oil Seal Kit (Inc. 3 each 30)	70-0001	1
25	Oil Drain Plug	39-0065	1	58	O-ring (See 852-0056)	N/A Sep.	1		V-Packing Assy (Inc. 3 each 31-34)	70-0234	1
26	Lockwasher	29-0154	8	59	Injector Nipple	46-0417	1		V-Packing Kit (Inc. 3 each 31, 32, 34)	70-0231	1
27	Bolt	27-8194	4	60	Injector Spring	49-0088	1		Valve Kit (Inc. 6 each 36, 37)	70-0235	1
28	Oil Cap	39-0066	1	61	O-ring (See 852-0056)	N/A Sep.	2		Unloader Seat Kit (Inc. 43-48)	70-0110	1
29	Oil Tube Extension	46-0351	1	62	Injector Piston	46-0418	1		Unloader Stem Kit (Inc.43, 47, 61, 73-88)	70-0120	1
30	Oil Seal (See 70-0237)	N/A Sep.	3	63	Flexible Ring	25-0277	1		Manifold Assembly (Inc. 31-70, 73-88)	70-0237	1
31	O-ring (See 70-0237)	N/A Sep.	3	64	Injector Regulating Knob	46-0469	1		Injector Assembly (Inc. 47, 49-64)	70-0005	1
32	O-ring (See 70-0237)	N/A Sep.	3	65	Manifold Plug	39-0072	1		Injector Repair Kit (Inc. 56-58, 61)	852-0056	1
33	V-packing Retainer	46-0807	3	66	O-ring	25-0273	2				

©Copyright 2001, Mi-T-M Corporation

PRESSURE SWITCH (22-0243)

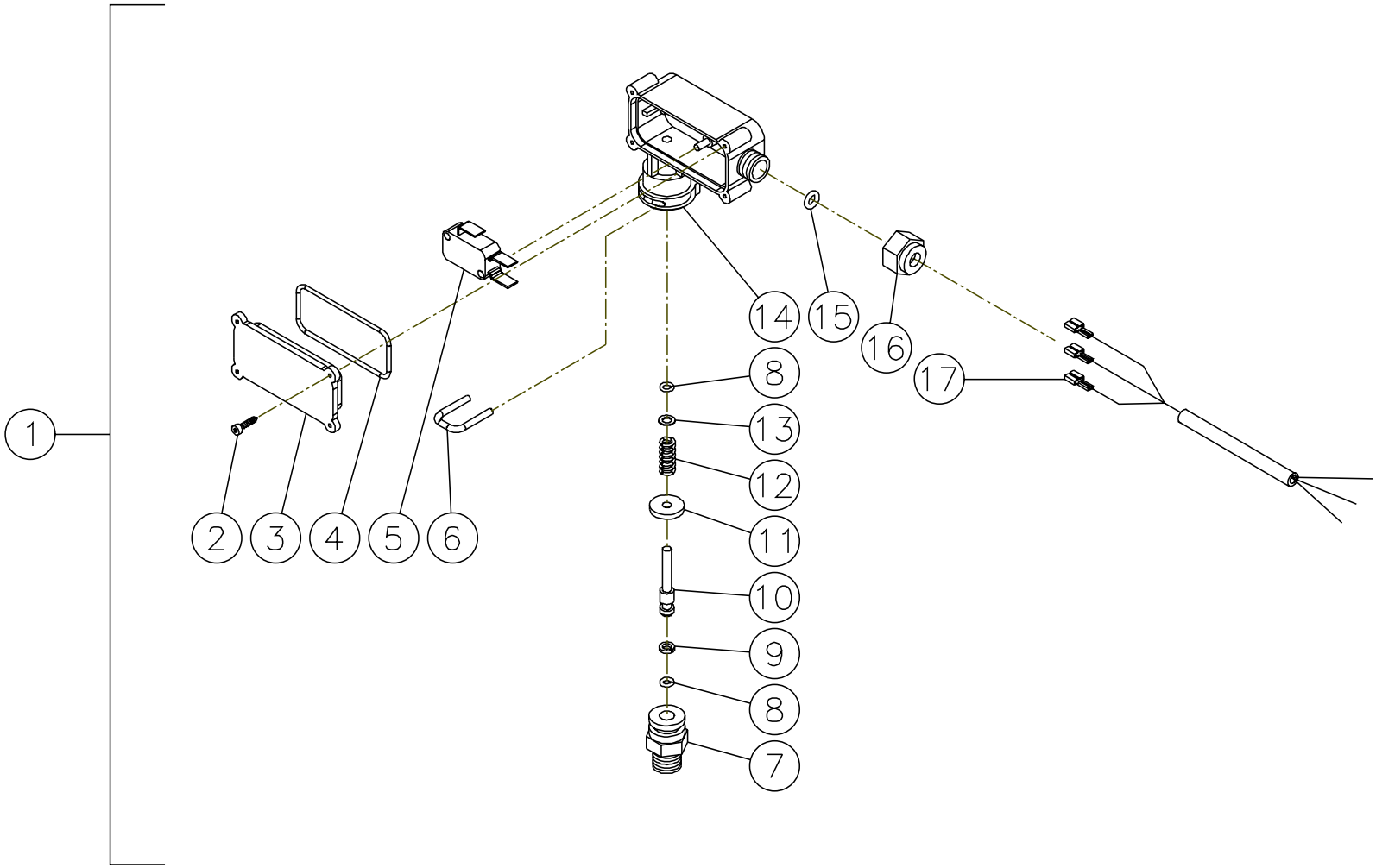

22-0171 & 22-0243-120799-BAR

©Copyright 2001, Mi-T-M Corporation

22-0243-120799-BAR

PRESSURE SWITCH (22-0243)			
REF. #	**DESCRIPTION**	**PART #**	**QTY.**
1	Pressure Switch	22-0243	1
2	Screw	N/A	4
3	Cover	N/A	1
4	O-ring (See 70-0306)	N/A Sep.	1
5	Micro Switch	N/A	1
6	Retainer Clip	N/A	1
7	Body	N/A	1
8	O-ring (See 70-0306)	N/A Sep.	2
9	Back-up Ring (See 70-0306)	N/A Sep.	1
10	Piston	N/A	1
11	Washer	N/A	1
12	Sprng	49-0145	1
13	Washer	N/A	1
14	Plastic Housing	N/A	1
15	O-ring (See 70-0306)	N/A Sep.	1
16	Nut	N/A	1
17	Wire Assembly	N/A	1
	O-ring Repair Kit (Inc. 4, 8, 9, 15)	70-0306	

©Copyright 2001, Mi-T-M Corporation

COIL DRAIN PLUG (850-0218)

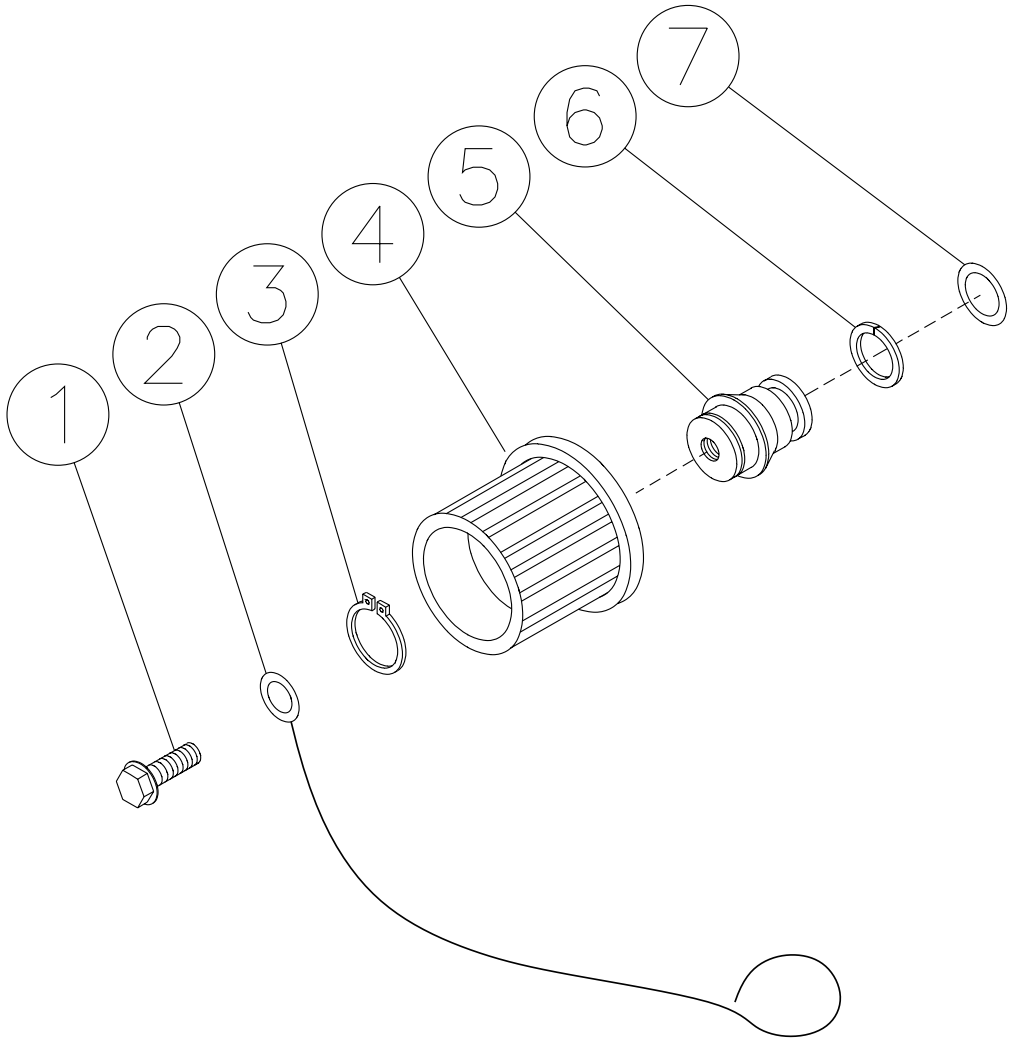

850-0218-041597-BAR

©Copyright 2001, Mi-T-M Corporation

850-0218-041597-BAR

COIL DRAIN PLUG (850-0218)			
REF. #	**DESCRIPTION**	**PART #**	**QTY.**
1	Bolt	27-9526	1
2	Retaining Cable	33-0260	1
3	Snap Ring	33-0261	1
4	Hand Wheel	16-0239	1
5	Plug	24-0147	1
6	Back-up Ring	25-0424	1
7	O-ring	25-0423	1

©Copyright 2001, Mi-T-M Corporation

HEAT EXCHANGER/EMF SYSTEM

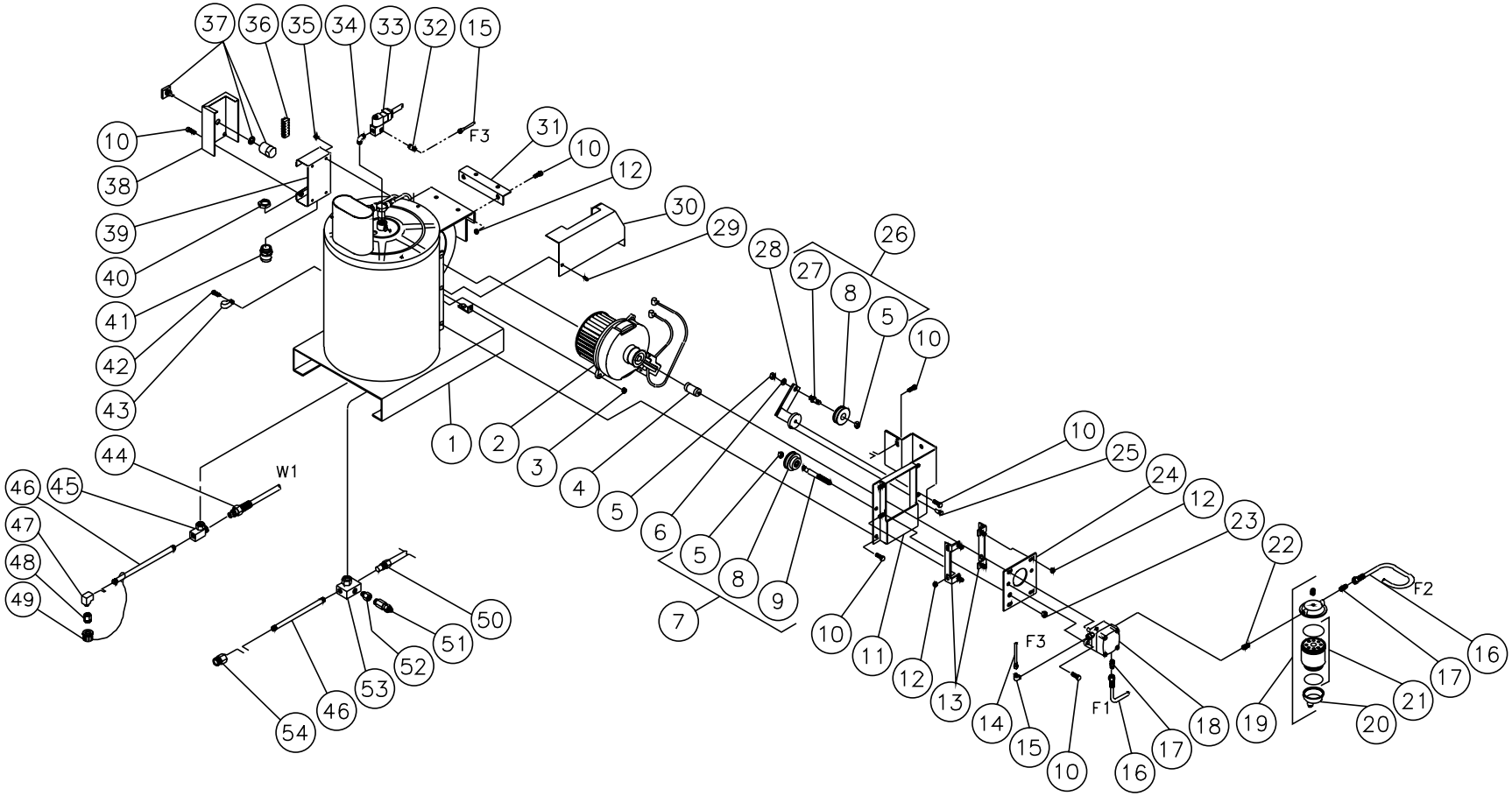

HSP098-022299-BAR

©Copyright 2001, Mi-T-M Corporation

HSP098-022299-BAR

HEAT EXCHANGER/ EMF SYSTEM

REF. #	DESCRIPTION	PART #	QTY. 3MGH	QTY. 3MGV		REF. #	DESCRIPTION	PART #	QTY. 3MGH	QTY. 3MGV
1	Boiler Assembly Complete	850-0224	1	1		29	Bolt	27-9526	2	2
2	EMF Assembly	850-0239	1	1		30	Beltguard- Honda	20-0362A01	1	-
3	Hex Nut	30-3022	2	2		-	Beltguard- Vanguard	20-0355A01	-	1
4	Fuel Pump Coupler	33-0225	1	1		31	Bracket	20-0354A01	-	1
5	Nut	30-0159	3	3		32	Connector	23-0291	1	1
6	Flatwasher	28-0022	1	1		33	Solenoid- 12 Volt	44-0098	1	1
7	Adjustable Sheave Shaft Assembly (Inc. 5, 8, 9)	850-0167	1	1		34	Elbow	23-0249	1	1
8	Sheave Assembly	850-0177	2	2		35	Bolt	27-9528	4	4
9	Pulley	33-0221	1	1		36	Terminal Stripe *(One Foot Required)	32-0394	1	1
10	Bolt	27-9524	11	13		37	Switch Cam	32-0399	1	1
11	Fuel Pump Bracket	20-0353A01	1	1		38	Electric Box Cover	20-0357A01	1	1
12	Hex Nut	30-3023	8	10		39	Electric Box Backplate	20-0356A01	1	1
13	Bracket	20-0360A01	2	2		40	Electrical Locknut	32-0292	1	1
14	Fuel Line	33-0217	1	1		41	Strain Relief	9-0046	1	1
15	Elbow	23-0248	1	1		42	Screw	27-3062	1	1
16	Fuel Hose	15-0147	2	2		43	Cable Clamp	32-0428	1	1
17	Connector	23-0247	2	2		44	High Pressure Hose Assembly	15-0199	1	1
18	Fuel Pump	3-0129	1	1		45	Coil Inlet Connector Assembly	850-0225	1	1
19	Filter Fuel Water Seperator	19-0070	1	1		46	Nipple	24-0122	2	2
20	Fuel Water Seperator Replacement Bowl	19-0071	1	1		47	Elbow	23-0306	1	1
21	Fuel Water Seperator Replacement Filter	19-0053	1	1		48	Adapter	23-0279	1	1
22	Hex Nipple	23-0250	1	1		49	Drain Plug Assembly	850-0218	1	1
23	Hex Nut	30-0010	1	1		50	High Limit Switch Probe	32-0421	1	1
24	Plate	20-0363A01	1	1		51	Pressure Relief Valve	22-0272	1	1
25	Pin	33-0211	1	1		52	Adapter Coil Outlet	23-0369	1	1
26	Tensioner Sheave Shaft Assembly (Inc. 5, 8, 27)	850-0166	1	1		53	Coil Outlet Assembly	850-0251	1	1
27	Shaft	33-0212	1	1		54	Hex Reducer	23-0197	1	1
28	Tensioner Base	10-0071	1	1		*Must Order in One Foot Lengths				

©Copyright 2001, Mi-T-M Corporation

BOILER ASSEMBLY (850-0224)

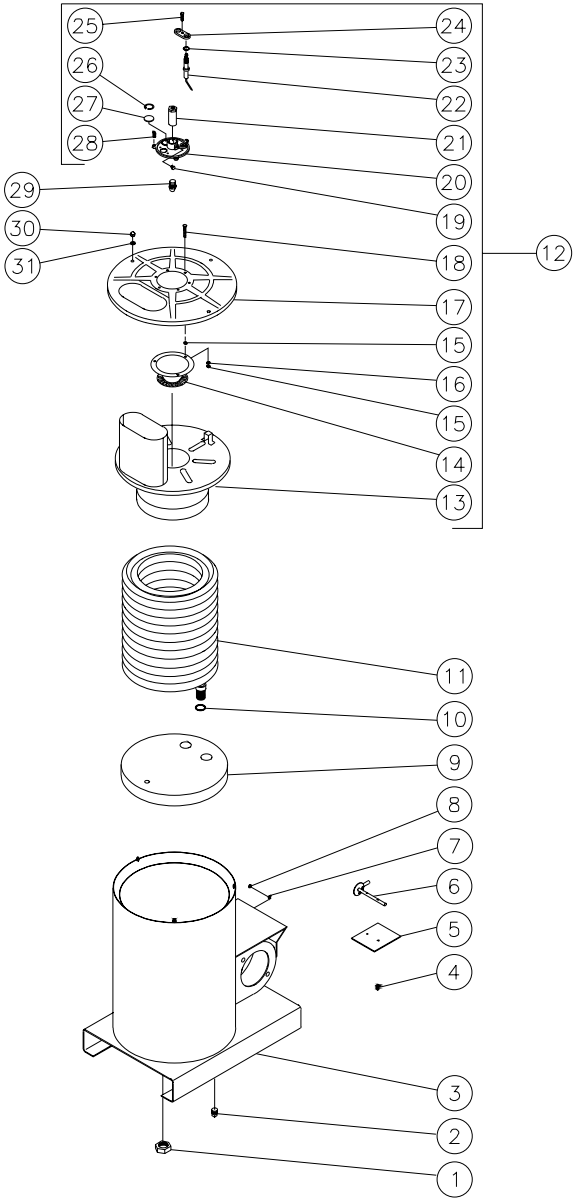

ELECTRODE GAP SETTINGS

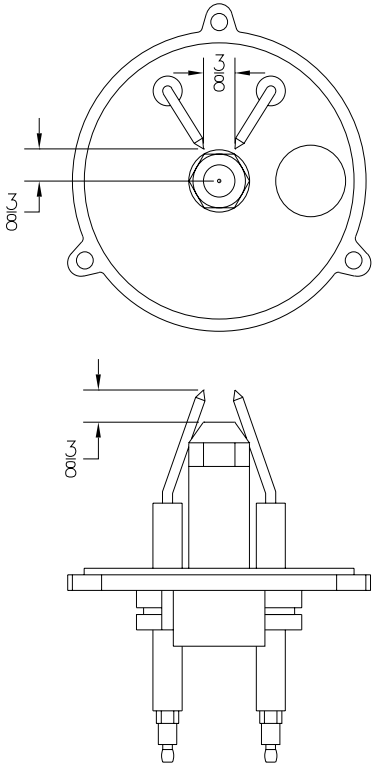

850-0224-052998-BAR

OMHSP71-082698-BAR

©Copyright 2001, Mi-T-M Corporation

For parts Call 888-279-9274

850-0224-052998-BAR

BOILER ASSEMBLY (850-0224)								
REF. #	DESCRIPTION	PART #	QTY.		REF. #	DESCRIPTION	PART #	QTY.
1	Hex Nut	30-6004	2		17	Top Pan	20-0323	1
2	Plug	24-0034	1		18	Bolt	27-8806	3
3	Heat Exchanger Assembly	20-0348A01	1		19	Bolt	27-8805	1
4	Bolt Hex Head	27-8879	2		20	Support Plate	33-0183	1
5	Air Diverter Plate	20-0454A01	1		21	Nozzle Holder	33-0182	1
6	Air Diverter Stem Assembly	20-0377A01	1		22	Electrode	32-0377	2
7	Lockwasher	28-1009	1		23	Washer	28-1007	2
8	Nut	30-6001	1		24	Electrode Mounting Plate	33-0180	1
9	Insulation	33-0267	1		25	Bolt	27-8807	1
10	Washer	28-0521	2		26	Snap Ring	25-0290	1
11	Heat Exchanger Coil Assembly	66-0010	1		27	Sight Glass	33-0179	1
12	Pan Assembly (Includes 13-28)	70-0184	1		28	Bolt	27-8803	3
13	Exhaust Pan	20-0324	1		29	Fuel Nozzle	18-0310	1
14	Heat Deflector	20-0325	1		30	Nut	30-6002	3
15	Nut	30-6001	6		31	Washer	28-1028	3
16	Lockwasher	28-1009	3			Boiler Assembly Complete (Inc. 1-28, 30, 31)	850-0224	1

©Copyright 2001, Mi-T-M Corporation

GUN/WAND (850-0179) & ADJUSTABLE PRESSURE DUAL LANCE (850-0185)

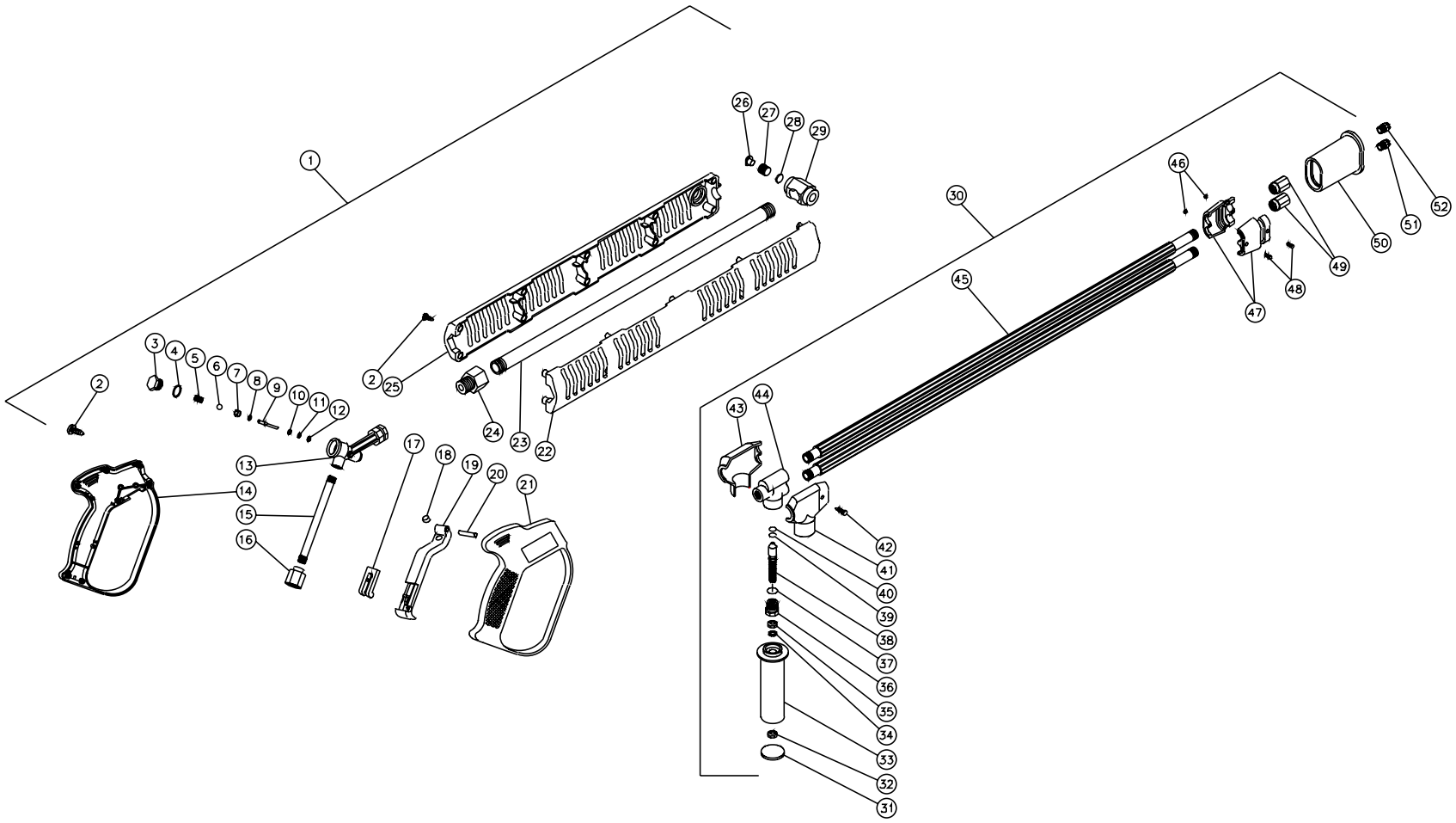

OMGEN256-101700-RD

©Copyright 2001, Mi-T-M Corporation

GUN/WAND (850-0179) & ADJUSTABLE PRESSURE DUAL LANCE (850- 0185)

REF. #	DESCRIPTION	PART #	QTY.	REF. #	DESCRIPTION	PART #	QTY.
1	Gun w/Lance Assembly (2-29)	850-0179	1	29	Lance Holder (See 850-0179)	N/A Sep.	1
2	Screw	27-8382	13	30	Adjustable Dual Lance Assembly (Includes 31-51)	850-0185	1
3	Plug (See 70-0057)	N/A Sep.	1	31	Handle Plug	16-0312	1
4	O-ring (See 70-0057)	N/A Sep.	1	32	Hex Nut	30-3002	1
5	Spring (See 70-0057)	N/A Sep.	1	33	Handle	16-0313	1
6	Ball (See 70-0057)	N/A Sep.	1	34	Washer	28-1021	1
7	Seat (See 70-0057)	N/A Sep.	1	35	Hex Nut	30-3010	1
8	O-ring (See 70-0057)	N/A Sep.	1	36	Hex Adapter	23-0271	1
9	Pin (See 70-0057)	N/A Sep.	1	37	O-ring	25-0351	1
10	Washer (See 70-0057)	N/A Sep.	1	38	Piston Stem	16-0314	1
11	O-ring (See 70-0057)	N/A Sep.	1	39	Back-up Ring	25-0352	1
12	Back-up Ring (See 70-0057)	N/A Sep.	1	40	O-ring	25-0353	1
13	Housing	23-0295	1	41	Upper Protector	16-0315	1
14	Plastic Housing (Left Side)	16-0336	1	42	Lower Protector	16-0316	1
15	Pipe	21-0095	1	43	Body	23-0272	1
16	Nipple	23-0174	1	44	Screw	27-8862	1
17	Trigger Safety Lock	16-0332	1	45	Lance w/Protective Cover	16-0328	2
18	Trigger Rest	16-0333	1	46	Hex Nut	30-3060	2
19	Trigger	16-0335	1	47	Pipe Clamp	16-0318	2
20	Trigger Pin	43-0069	1	48	Screw	27-8861	2
21	Plastic Housing (Right Side)	16-0334	1	49	Nipple	24-0127	2
22	Guard Lance (Right Side) (See 70-0324)	N/A Sep.	1	50	Nozzle Protector	16-0319	1
23	Pipe	16-0277	1	51	Nozzle-4060	18-0110	1
24	Adapter	16-0283	1	52	Nozzle-1503	18-0053	1
25	Guard Lance (Left Side) (See 70-0324)	N/A Sep.	1		Gun Repair Kit (Includes 3-12)	70-0057	
26	Plug	39-0076	1		O-ring Kit (Includes 37, 39, 40)	70-0143	
27	Screw	49-0103	1		Plastic Housing Kit (Includes 2, 22, 25, 26)	70-0324	
28	Spacer	16-0282	1				

©Copyright 2001, Mi-T-M Corporation

FUEL TANK (850-0214)

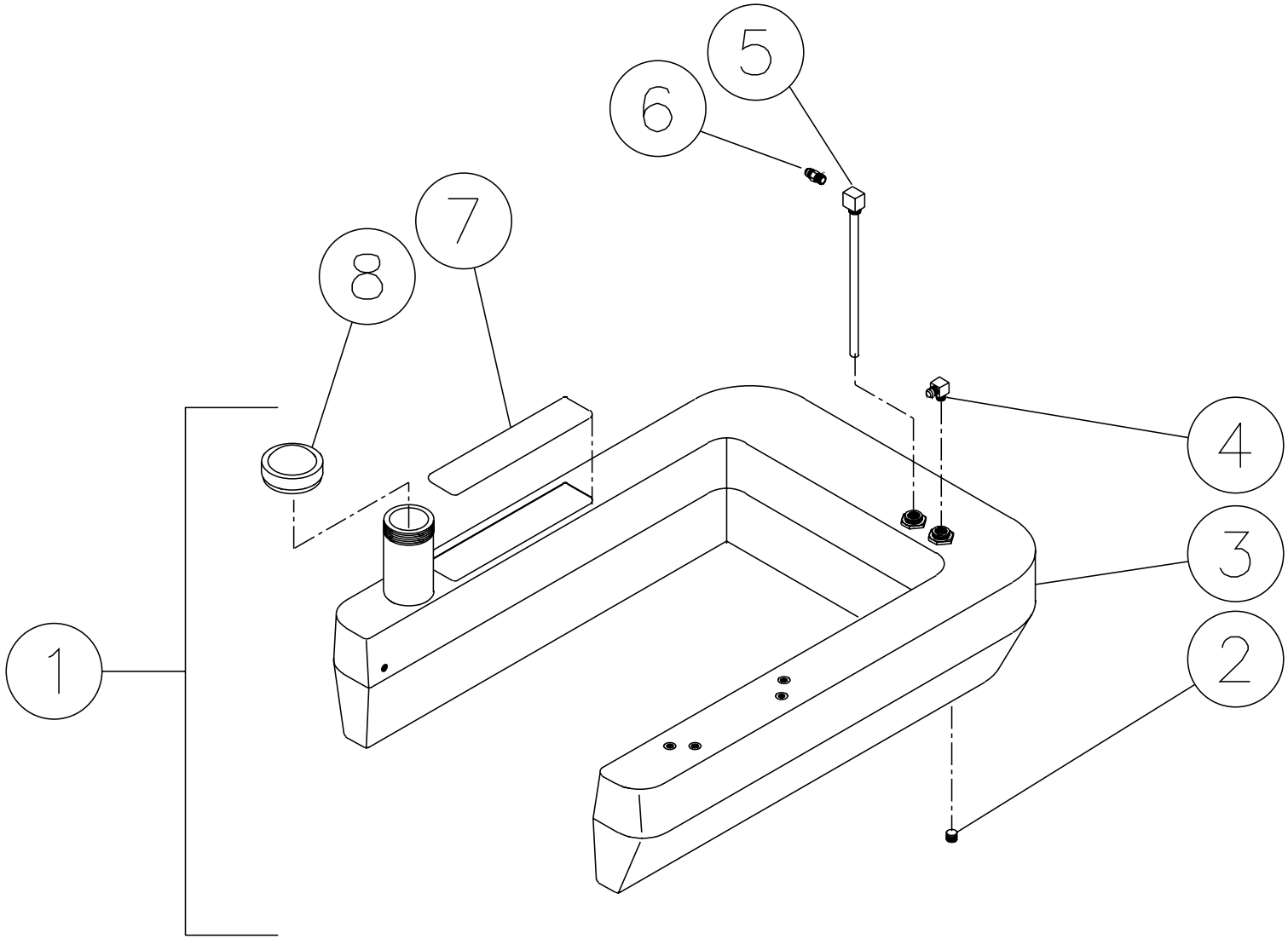

850-0214-121797-BAR

©Copyright 2001, Mi-T-M Corporation

850-0214-121797-BAR

FUEL TANK (850-0214)			
REF. #	**DESCRIPTION**	**PART #**	**QTY.**
1	Fuel Tank Assembly (Inc. 2-8)	850-0214	1
2	Plug	23-0296	1
3	Fuel Tank (See 850-0214)	N/A Sep.	1
4	Elbow	23-0237	1
5	Fuel Pick-up Line	33-0270	1
6	Flare	23-0247	1
7	Decal-Warning-Risk of Fire (E/S)	34-0806	1
8	Vented Fuel Cap	12-0033	1

©Copyright 2001, Mi-T-M Corporation

FUEL PUMP (3-0129)

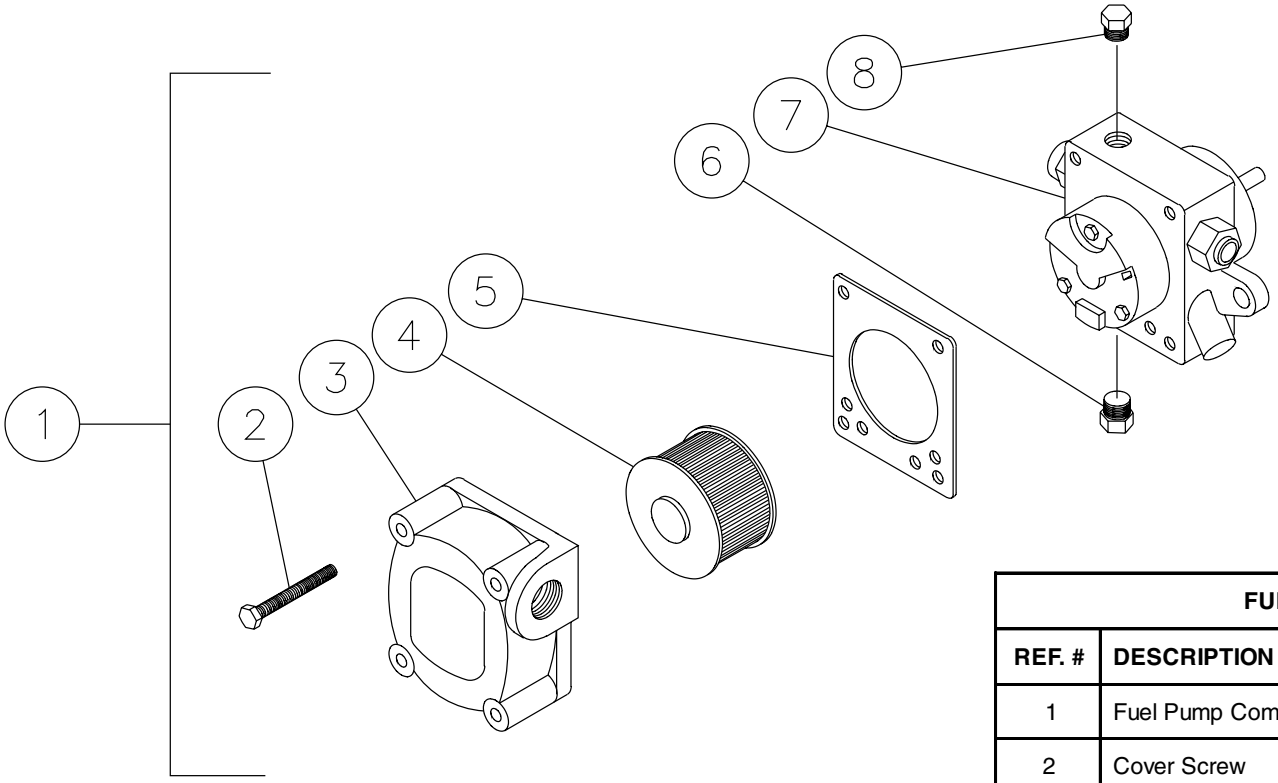

0MHSP018-041597-BAR

FUEL PUMP (3-0129)			
REF. #	**DESCRIPTION**	**PART #**	**QTY.**
1	Fuel Pump Complete (Includes 2-8)	3-0129	1
2	Cover Screw	46-1006	4
3	Cover-Left Hand	46-1018	1
4	Strainer	19-0034	1
5	Cover Gasket	26-0109	1
6	Plug	24-0044	3
7	Body	N/A	1
8	Plug	24-0082	1

OMHSP018-041597-BAR

©Copyright 2001, Mi-T-M Corporation

FUEL SOLENOID (44-0098)

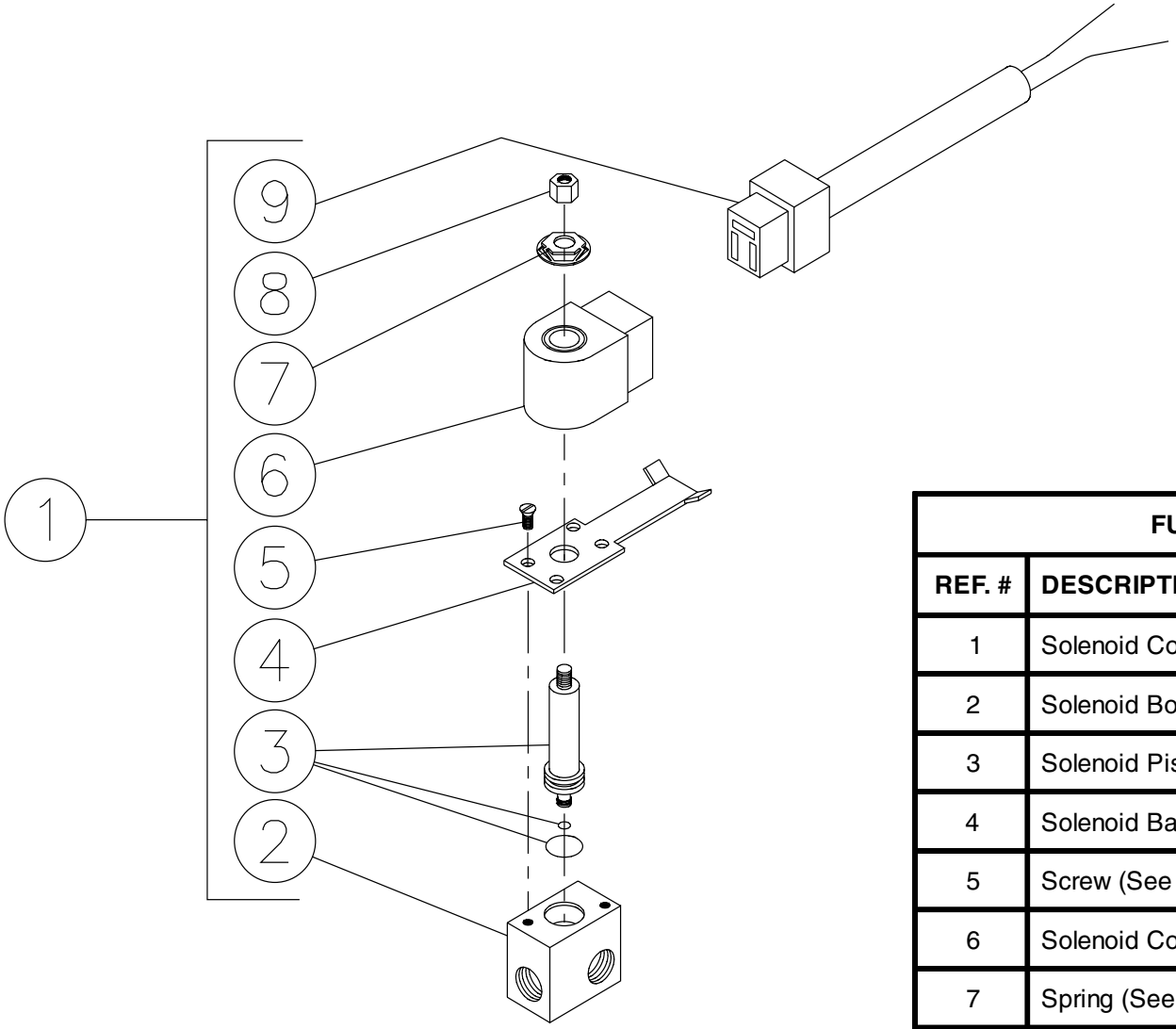

0MHSP013-44-0098-121698-BAR

FUEL SOLENOID (44-0098)			
REF. #	**DESCRIPTION**	**PART #**	**QTY.**
1	Solenoid Complete-12V	44-0098	1
2	Solenoid Body	46-1013	1
3	Solenoid Piston	46-1012	1
4	Solenoid Base	46-1014	1
5	Screw (See 44-0098)	N/A Sep.	2
6	Solenoid Coil-120V	46-1015	1
7	Spring (See 44-0098)	N/A Sep.	1
8	Piston Nut	46-1016	1
9	Din Connector Cord	32-0443	1

OMHSP013A-121698-BAR

©Copyright 2001, Mi-T-M Corporation

EMF SYSTEM (850-0239)

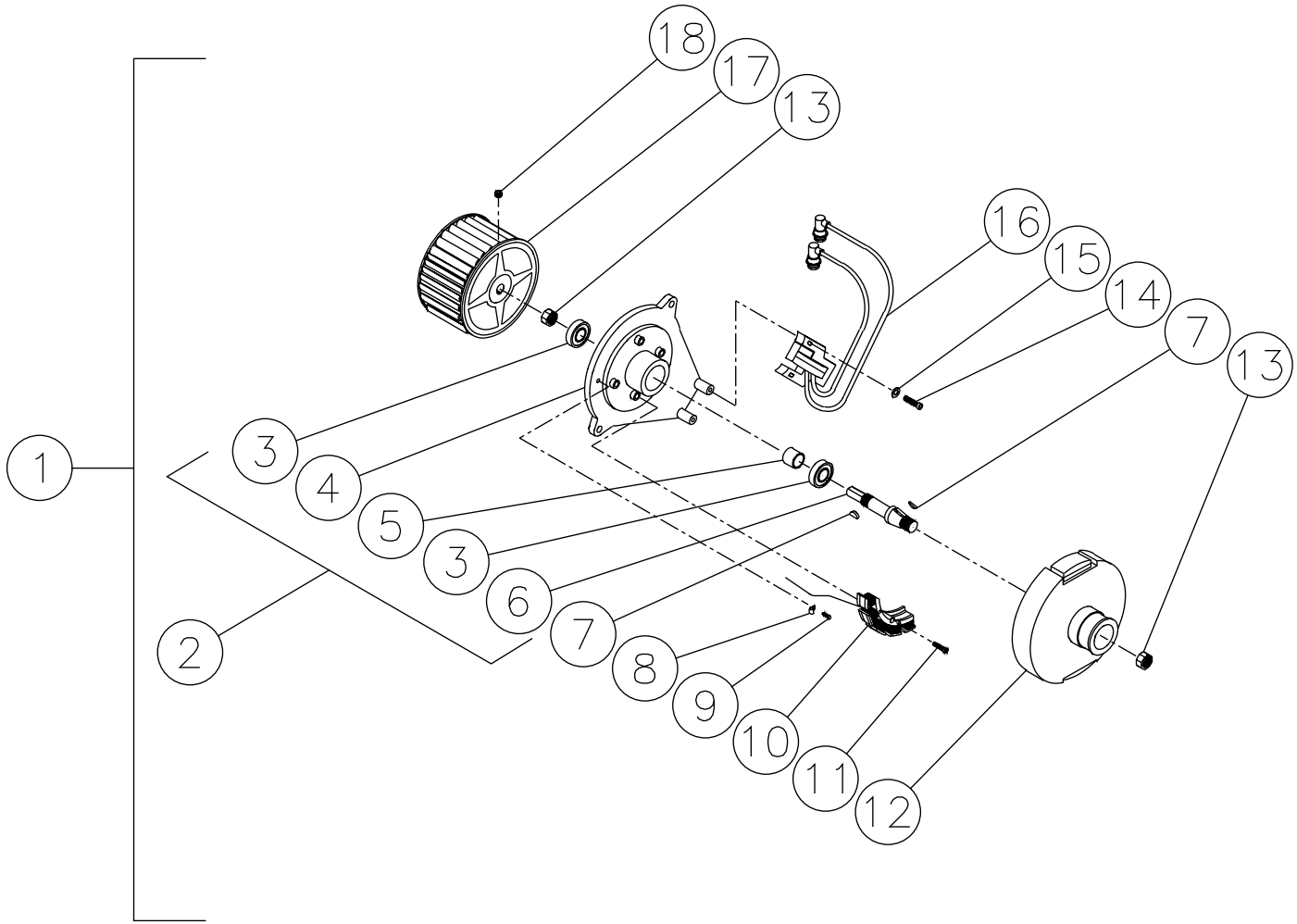

850-0239-113099-BAR

©Copyright 2001, Mi-T-M Corporation

For parts Call 888-279-9274

850-0239-113099-BAR

EMF SYSTEM (850-0239)			
REF. #	**DESCRIPTION**	**PART #**	**QTY.**
1	EMF Assembly Complete (Inc. 2-17)	850-0239	1
2	Blower Flange Assembly (Inc. 3-6)	850-0162	1
3	Sealed Bearing	48-0041	2
4	Blower Flange	38-0040	1
5	Spacer	33-0206	1
6	Blower Shaft	20-0347	1
7	Woodruff Key	43-0080	2
8	Cable Clamp	32-0403	1
9	Screw	27-2070	1
10	Stator Coil	850-0189	1
11	Screw	27-0740	4
12	Flange Magnet Hub	38-0041	1
13	Hex Nut	30-0177	2
14	Bolt	27-8898	2
15	Flatwasher	28-0002	2
16	Ignition Coil Assembly	850-0161	1
17	Blower Fan	44-0105	1
18	Set Screw	30-3021	1

©Copyright 2001, Mi-T-M Corporation

WIRING SCHEMATIC

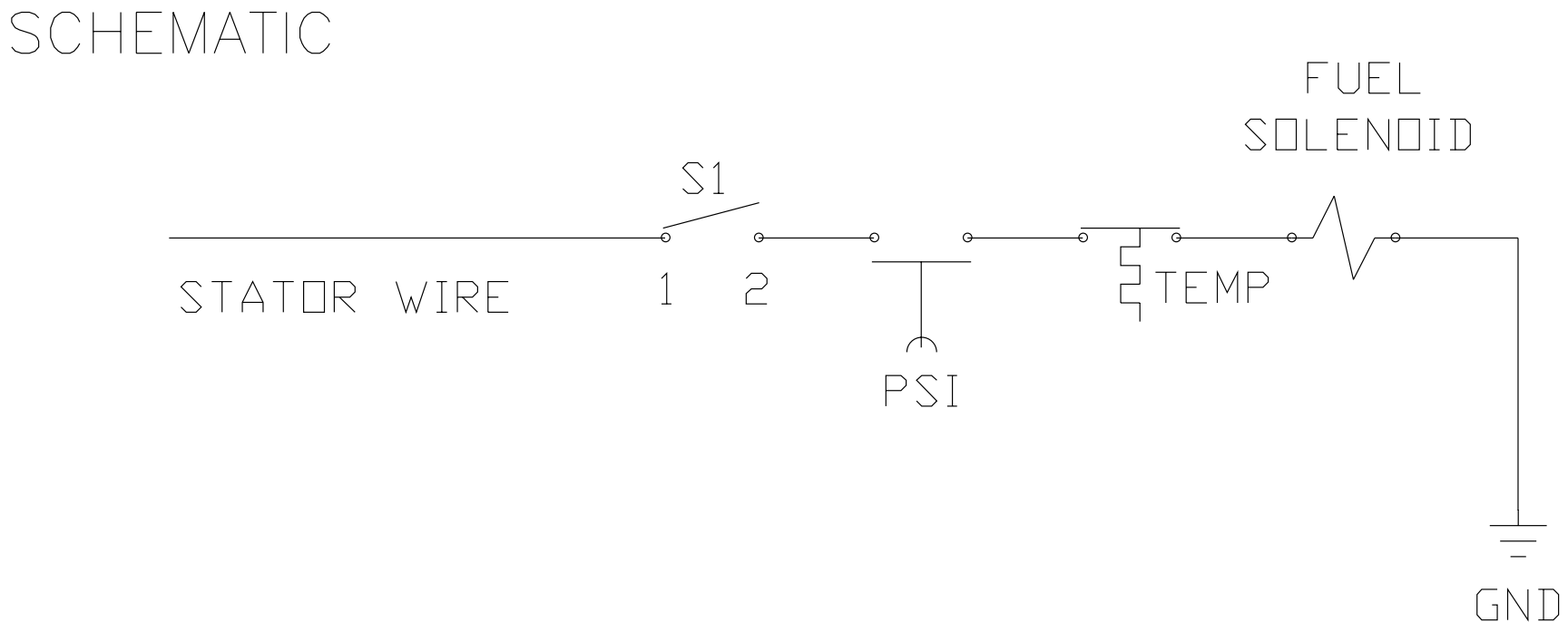

OMHSP014A-072996-JTR

©Copyright 2001, Mi-T-M Corporation

WIRING DIAGRAM

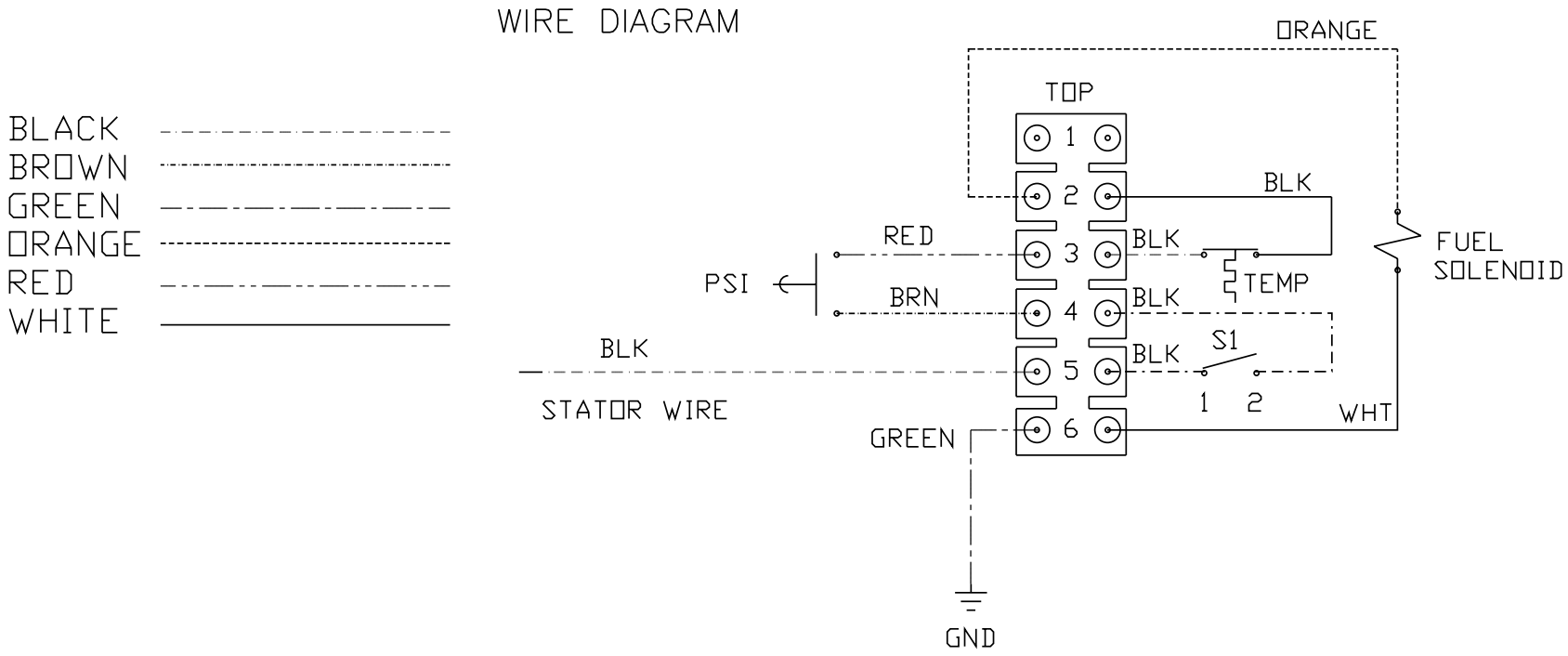

OMHSP014-072996-JTR

©Copyright 2001, Mi-T-M Corporation

For parts Call 888-279-9274

©Copyright 2001, Mi-T-M Corporation